SPOT LED 12V POWERLITE PLUS
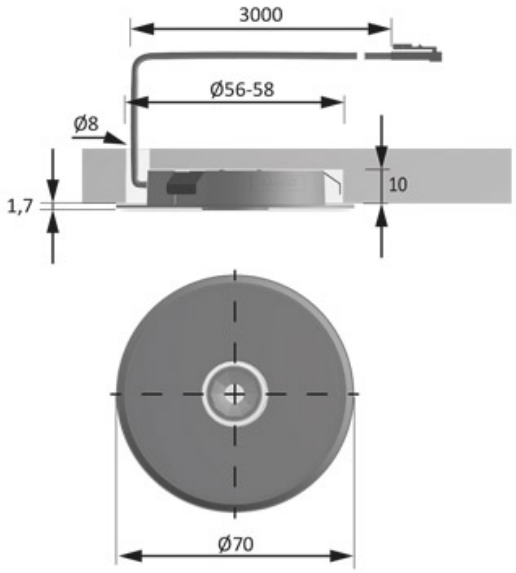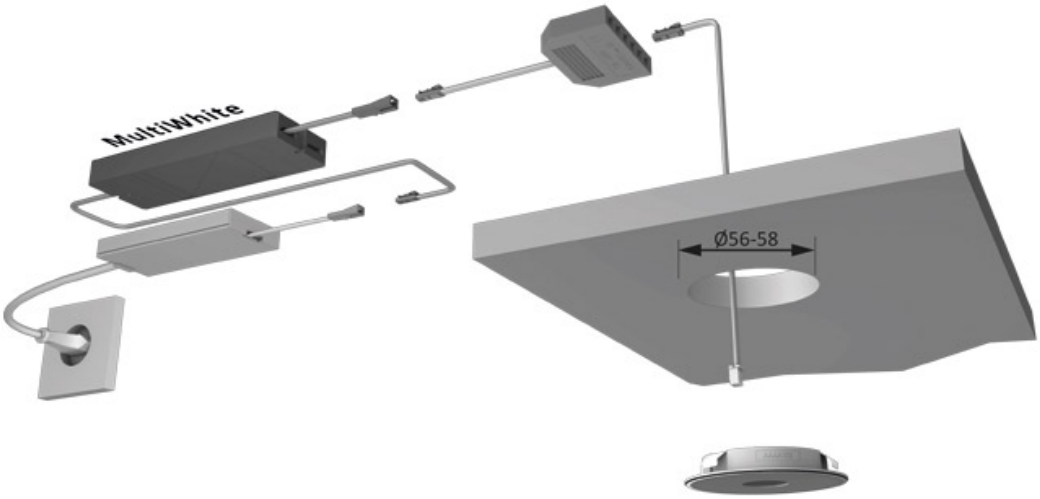
HALEMEIER