PLAQUE MURALE
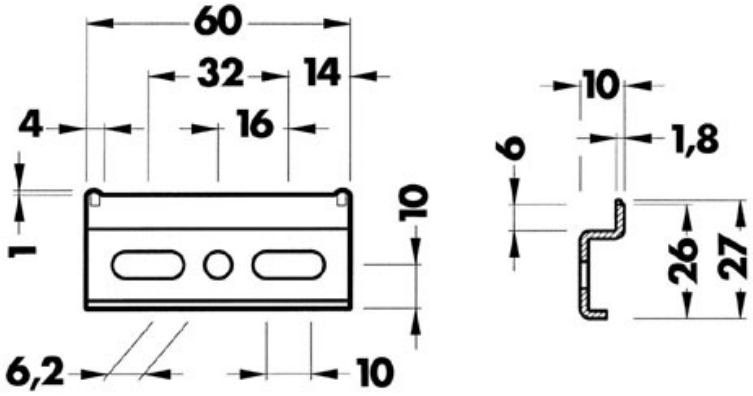
CAMAR