ENSEMBLE IBIZA
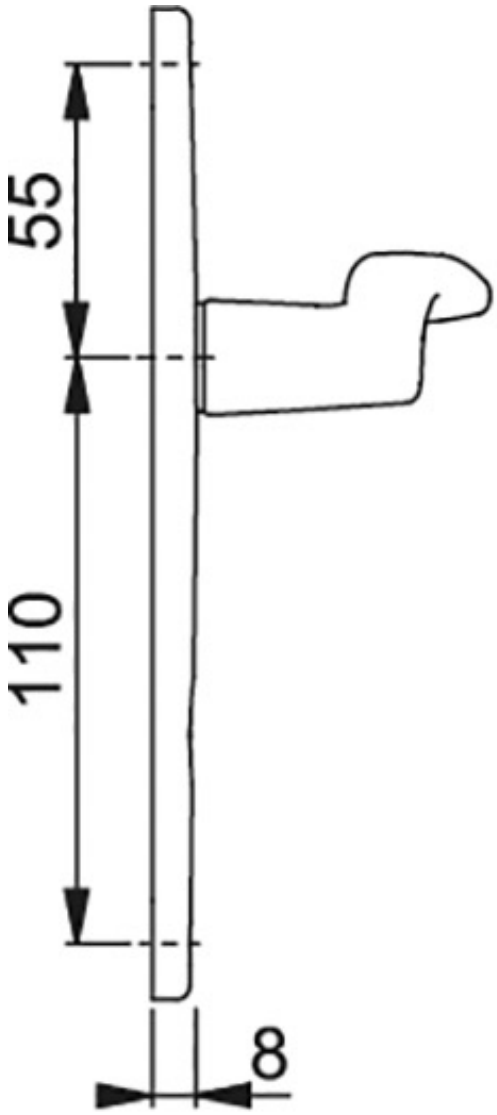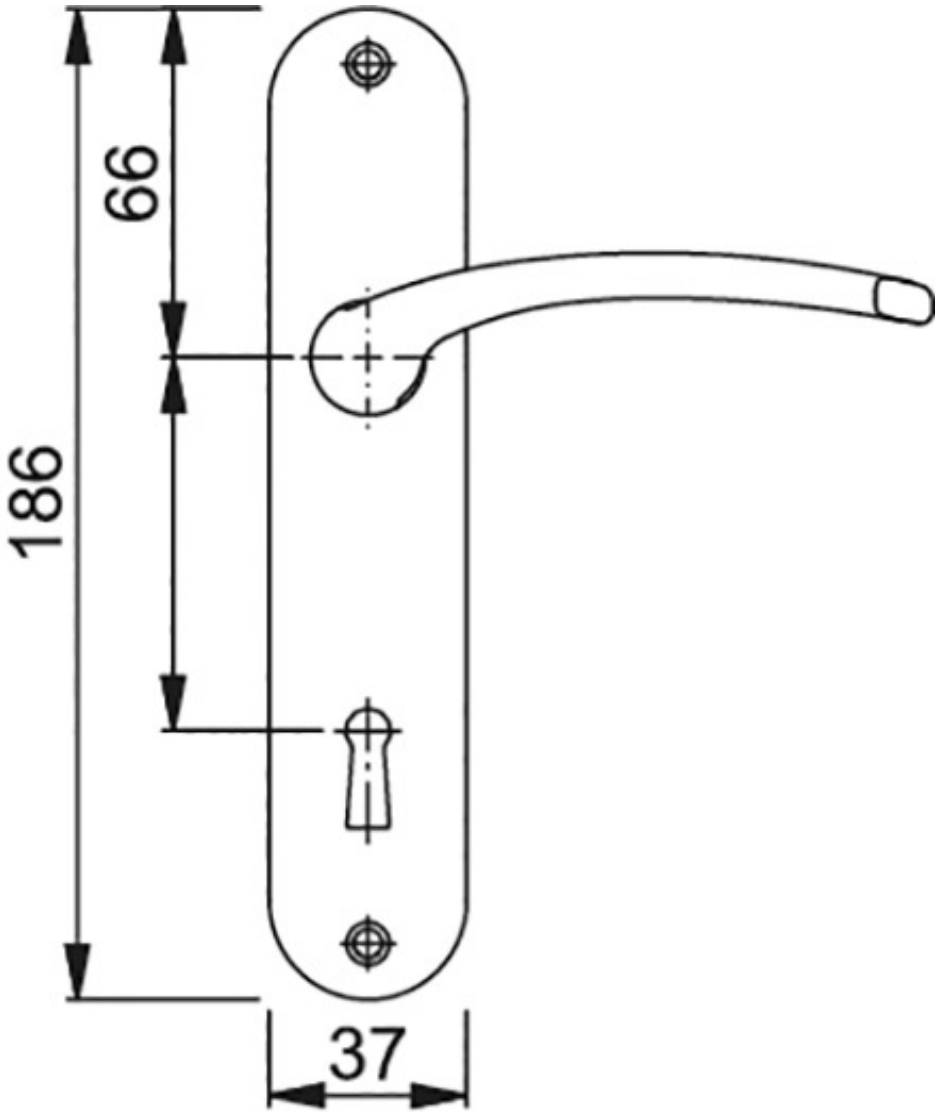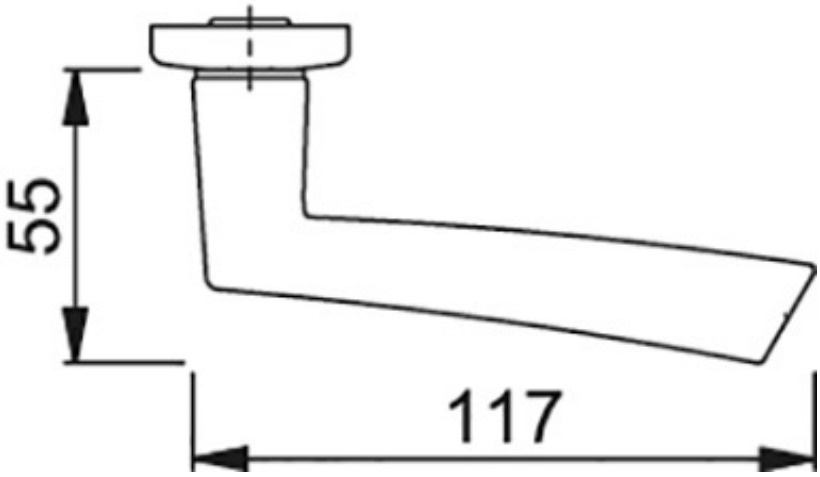
HOPPE