CAVALIERS U SUPPORTS TABLETTE CLASSIC 50

ELEMENT SYSTEM

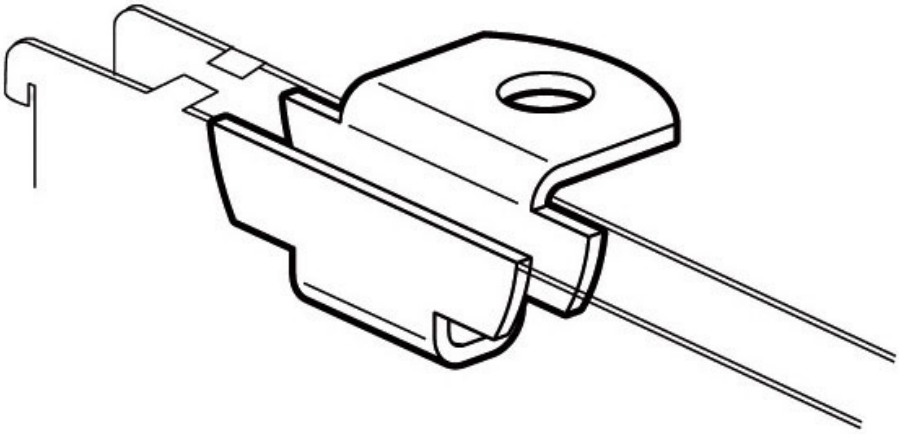
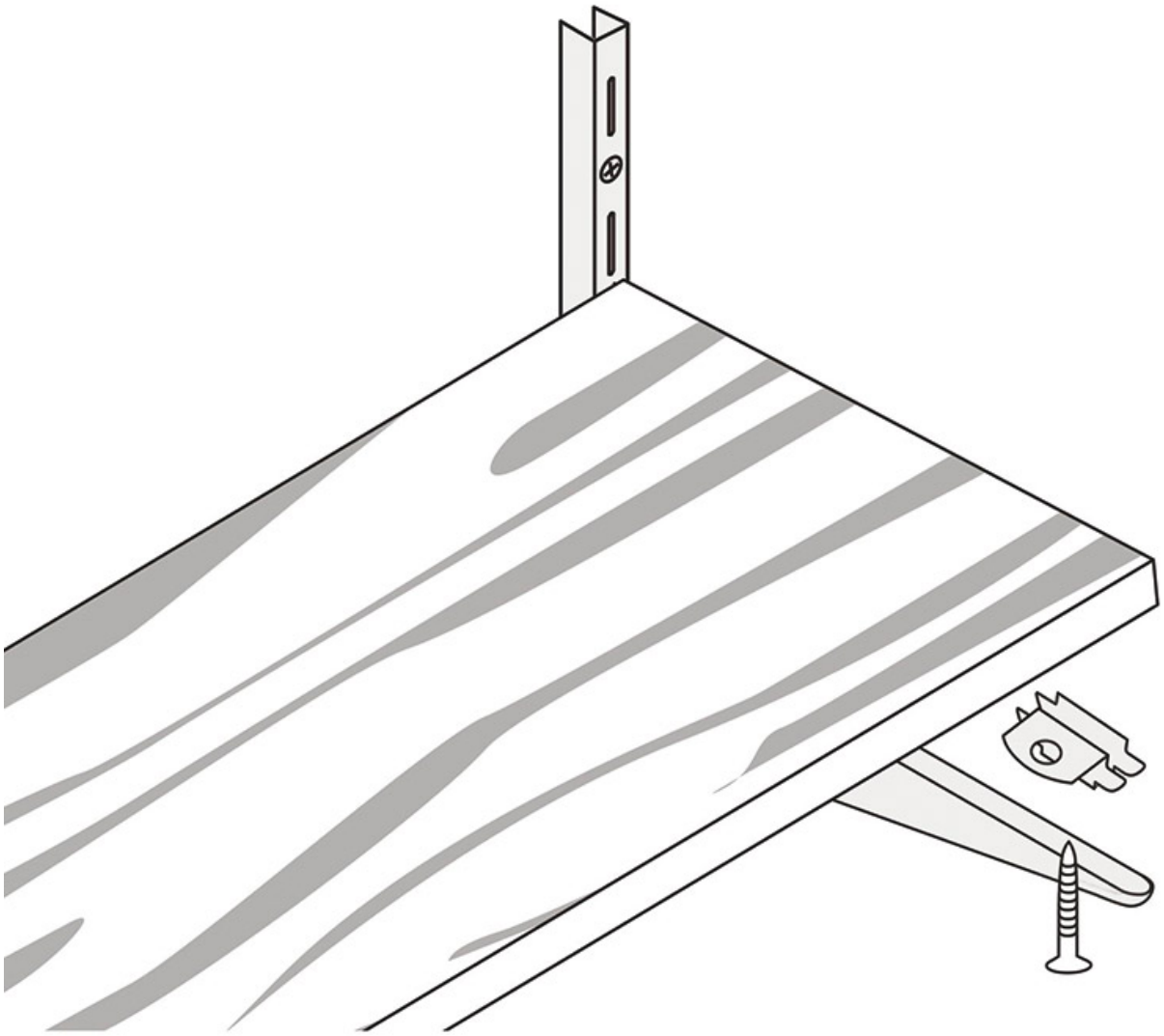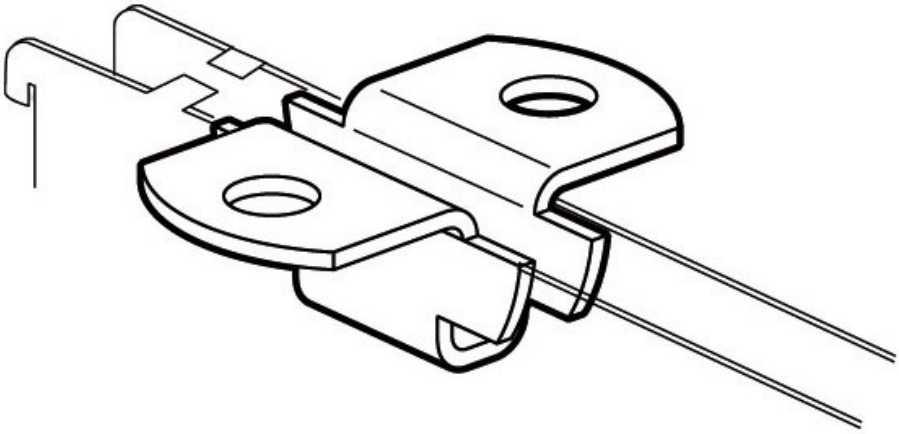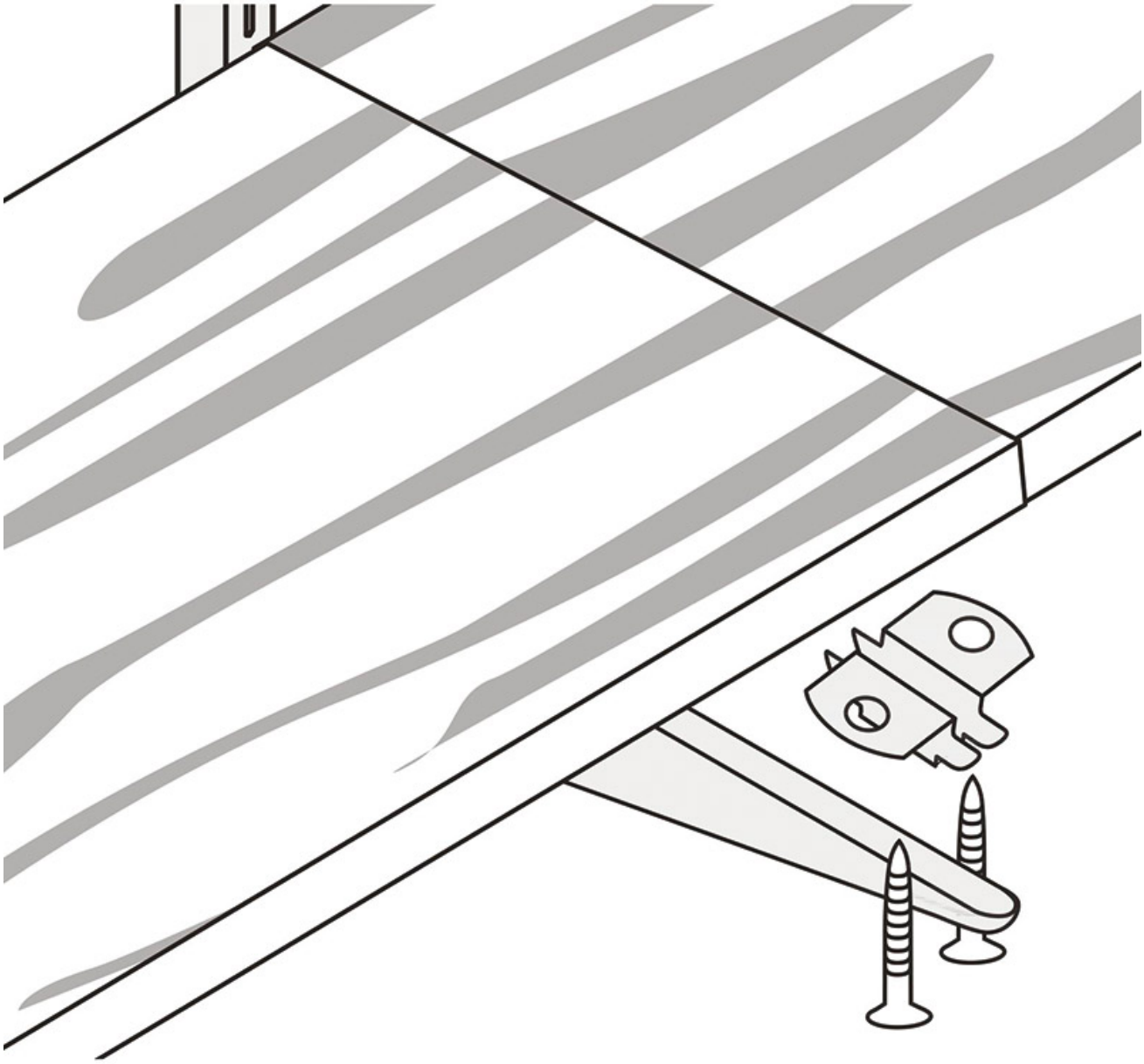
Tel : 02 43 13 49 49 Fax : 02 43 30 26 16 www.qama.fr