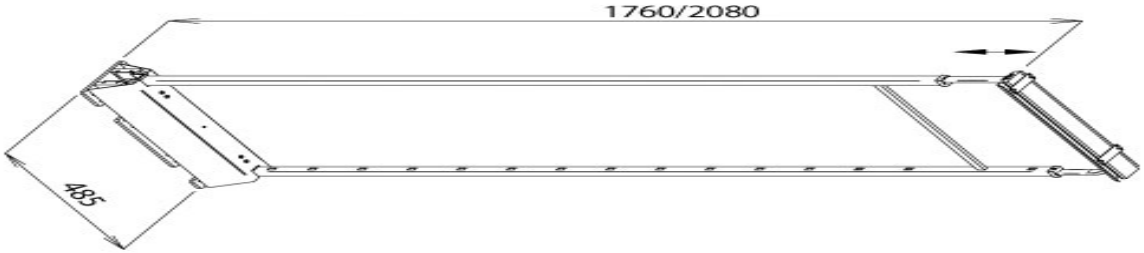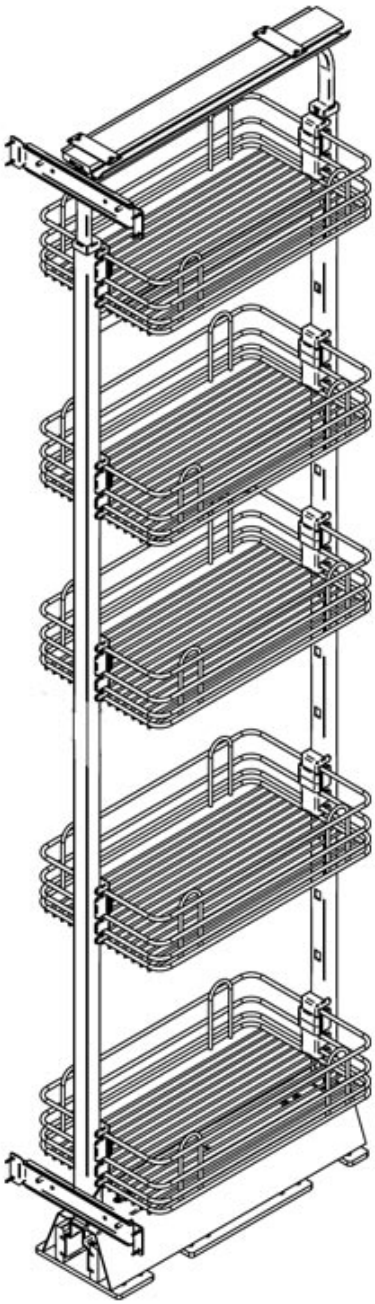
1760/2080
485